Lecture Series - MSG 141

C2-Simulation Interoperability (C2SIM)

Outline of Presentations

- **Presentation 1: Networked C2 Training, Mission Planning and Mission Rehearsal**
  - Force Readiness and Training
  - Mission Planning (COA and Wargaming)
  - Mission Rehearsal
  - UK Experience
- **Presentation 2: Simple Interoperation**
  - Single nation, single domain and multi-domain
- **Presentation 3: Complex Coalition Interoperation**
  - Multi-nations, multiple domains

C2SIM TO SUPPORT NETWORKED C2 TRAINING, MISSION PLANNING (COA ANALYSIS & WARGAMING) AND MISSION REHEARSAL

Kevin Galvin

APPROVED FOR PUBLIC RELEASE

Networked C2 Training, Mission Planning and Mission Rehearsal

- Use of simulation to stimulate a training audience, e.g.
  - To train different echelon commanders.
  - To train people how to use C2 systems – provide realistic report and request streams.
- Use of simulation to help evaluate mission plans
  - Prepare a plan using an operational planning tool
  - Run simulation in Faster-Than-Real-Time (FTRT) mode
  - Collect and process the simulation results to help support COA analysis
- Wargaming in support of COA
- Conduct Mission Rehearsal

Force Readiness and Training

'It cannot be too often repeated that in modern war … the chief factor in achieving triumph is what has been done in the way of preparation and training before the beginning of the war.'

Theodore Roosevelt, 1902

Training Commanders and Staffs

- Training as to cover the full spectrum of conflict to prepare military forces for military operations.
- Commanders and their staffs also need to be trained.
- Large scale FTX and more limited CPX were mechanisms for this training.
- They were however expensive to conduct and an FTX although providing training in real-time created environmental problems.

Command Post Training: The Manual 'Swivel-Chair' Interface

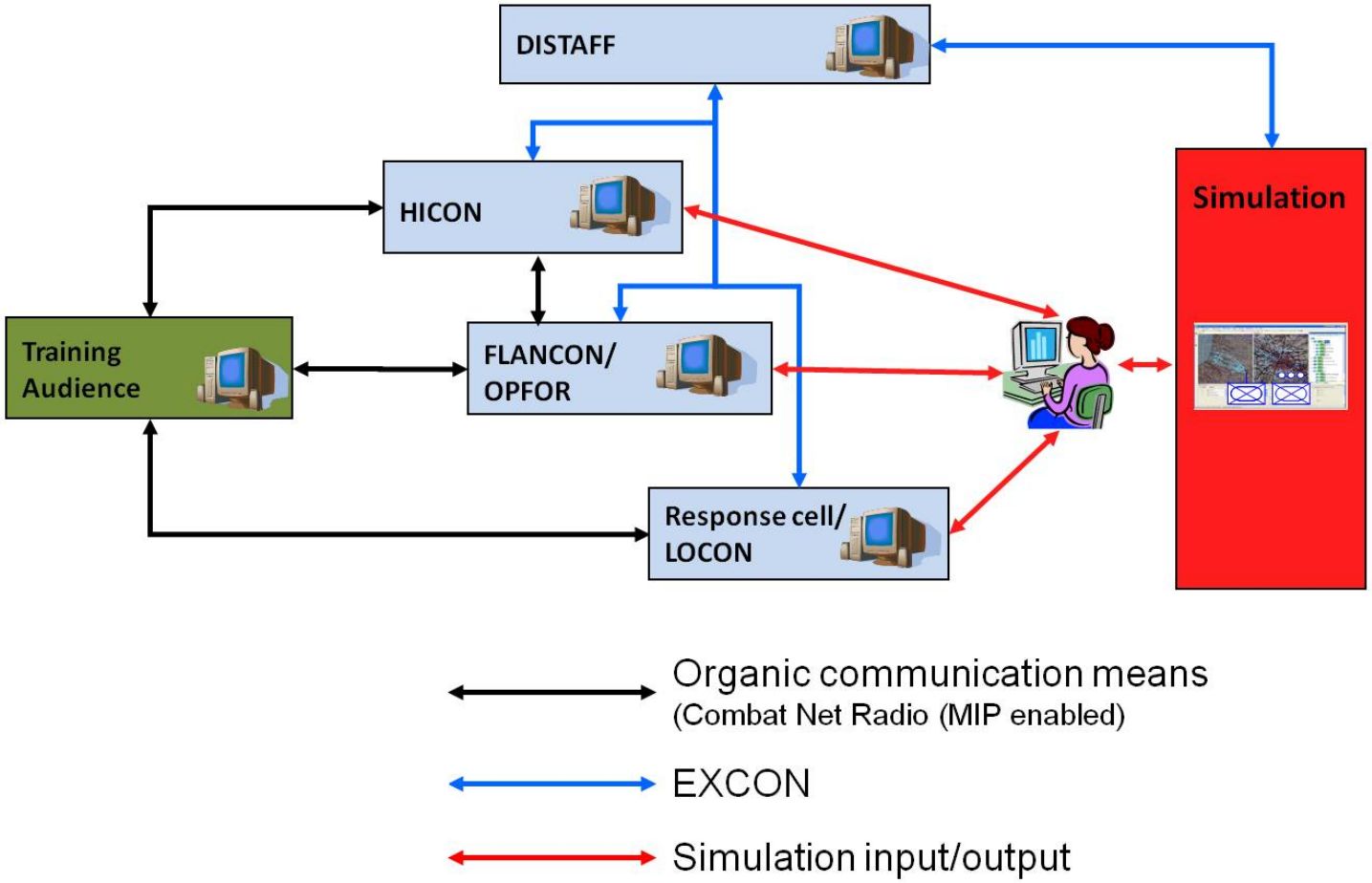

Impact of Digitised C2 Systems

- The development of digitised C2 systems also meant that they required location information for units to be input into the system to provide situational awareness. This led to the development of one-way feeds to the C2 system from the simulation.
- The US Army conducted a number of experiments to investigate how the situation could be improved.
- However, to exchange all C4I digital, voice, and video data that would be passed in a tactical situation with future modern simulations, a more **robust digital interface** was considered to be necessary.
- The term C4I was an acronym in use at the time this report was produced. It was Command, Control, Communications, Computers and Intelligence.

Reasons to develop Robust Interface

- Stove-piped C4I systems required unique input of common information – the same information was required to be input multiple times into each C4I system and the simulation.
- The majority of automated data flow was one-way, from the simulation to the C4I device for updating of unit locations, status, etc.
- There was no direct control of the simulation from the C4I device.
- There was no reduction in the size of the workstation controller contingent that were still required to translate and input commands into the simulation and therefore no change on the training requirement in order to serve as controllers.
- In addition each stovepipe C4I device required its own black box to translate information between it and the simulation.

Future Command Post Training

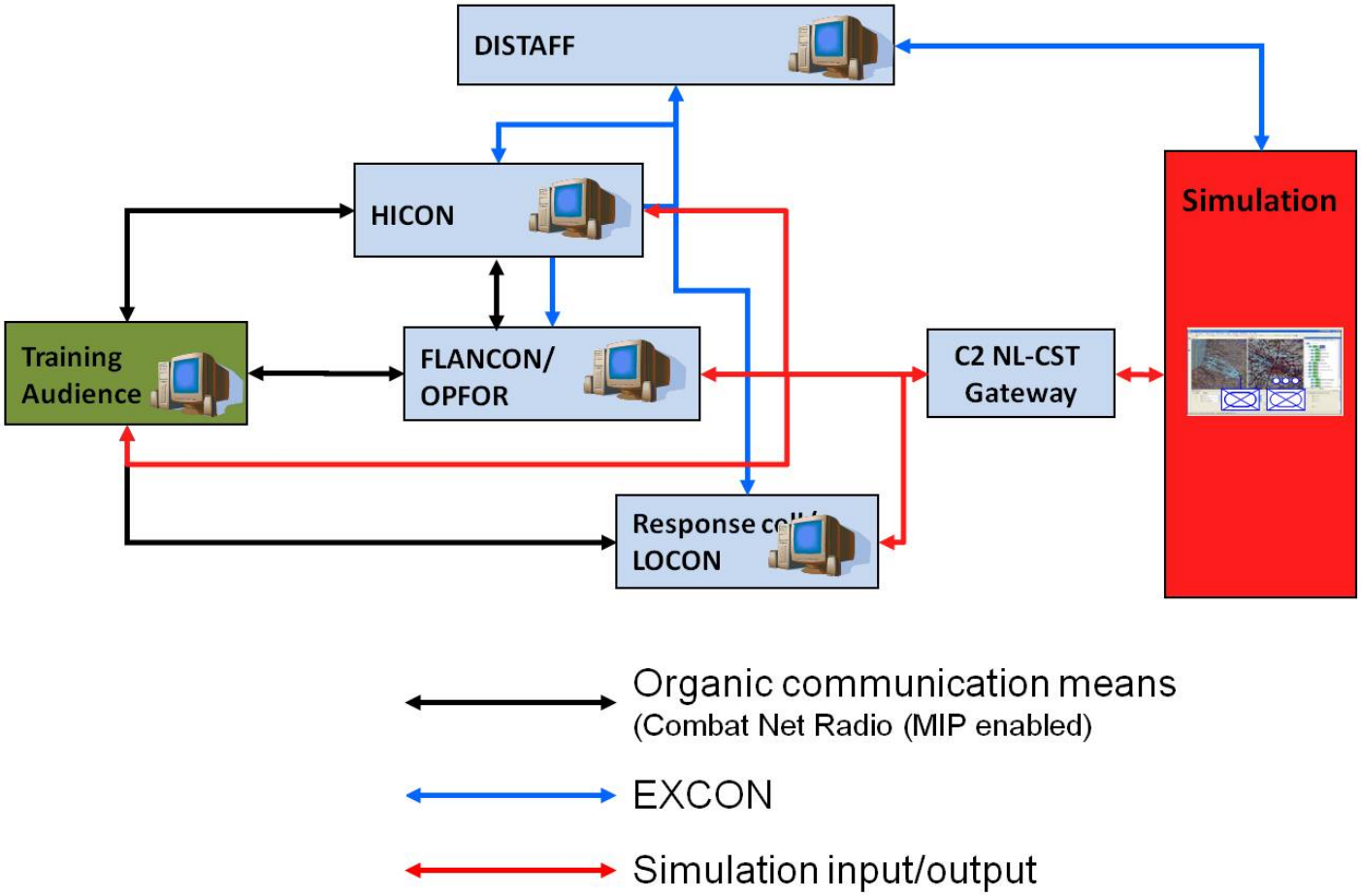

Mission Planning

"Warfare is not simple. Our business is increasingly and at times inconceivably complex. The planning process used by the Army has evolved over the years to allow for this increased complexity but at its core it is a system to help commanders understand a problem, and then derive an executable solution. The plans we create by the end of the process will not necessarily be simple, and indeed they may run to pages of complex coordination to sequence several lines of activity. But the problem will have been understood, and a plan created which is simplified for execution."

Major General J I Bashall CBE, GOC 1 (UK) Armoured Division, 2012

Mission Planning and MDMP

- Mission planning has always been the major function of a headquarters in the military decision-making process.
- Each nation has developed a mission decision making process based on a planning and execution process. This is often referred to as Plan, Refine, Execute Evaluate (PREE) process.
- Some nations use Assess, Plan, Refine, Execute (APRE).

- Example of the Military Decision Making Process (MDMP) at the tactical level.
- Nations have developed their own MDMP as illustrated below with the French Army

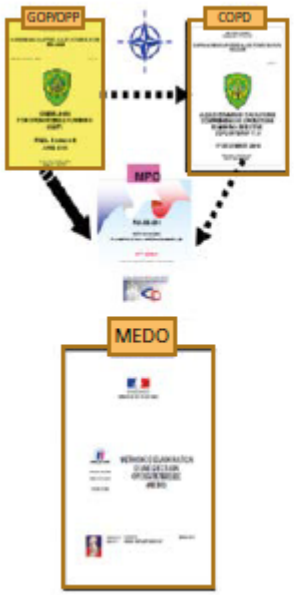

		Cadre MN		Cadre National
STRATEGIC LEVEL		OPP	FR augmentees in OHQ	MPO OHQ
OPERATIONAL LEVEL		OPP	FR augmentees in FHQ	MPO FHQ
TACTICAL LEVEL	LCC Corps	OPP	FR augmentees in LCC HQ	G5 MPO MEDO G3 MPO
	DIV	2 cas possibilities		
		Mission is clearly defined in CONOPS/LCC MEDO	Planned tasks in CONOPS/LCC G5 OPP G3 MEDO	
	TF TG	MEDO		MEDO

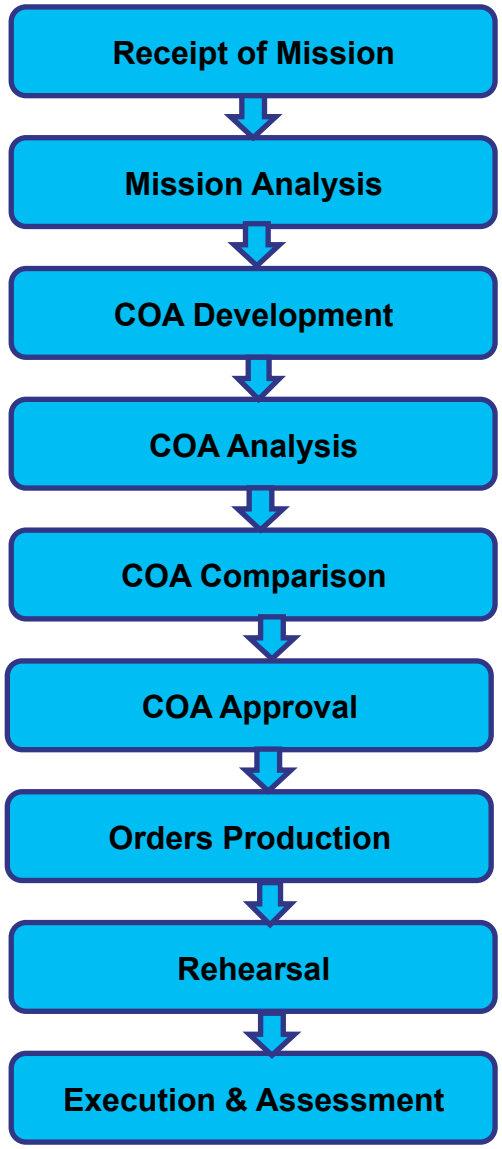

UK and Other Allied MDMP

Estimate	Nation	Utility
Operation Level		
Operational Estimate (OE)	UK	Operational (Campaign) Planning incorporating CJIIM
Comprehensive Operations Planning Directive (COPD)	NATO	Complex operational planning level incorporating CJIIM
Military Decision Making Process (MDMP)	US	Operation and Tactical planning process
Operational Planning Process (OPP)	FR	Land Component Command with CJIIM context
Method for Planning Operations (MPO)	FR	Operational planning for national (unilateral) operations
Tactical Level		
Tactical Estimate (TE)	UK	Planning for complex tactical problems, e.g. a brigade preparing for an intervention operation
Combat Estimate (CE)	UK	Short term tactical planning where the context of the mission is broadly understood and there is an emphasis on tempo of decision and action.
MDMP	US	Operation and Tactical planning process
Methode D'Elaboration D'Unde Decision Operationelle (MIDO)	FR	Tactical level used by divisions, TFs and BGs

French Methode D'Elaboration D'Unde Decision Operationelle (MEDO)

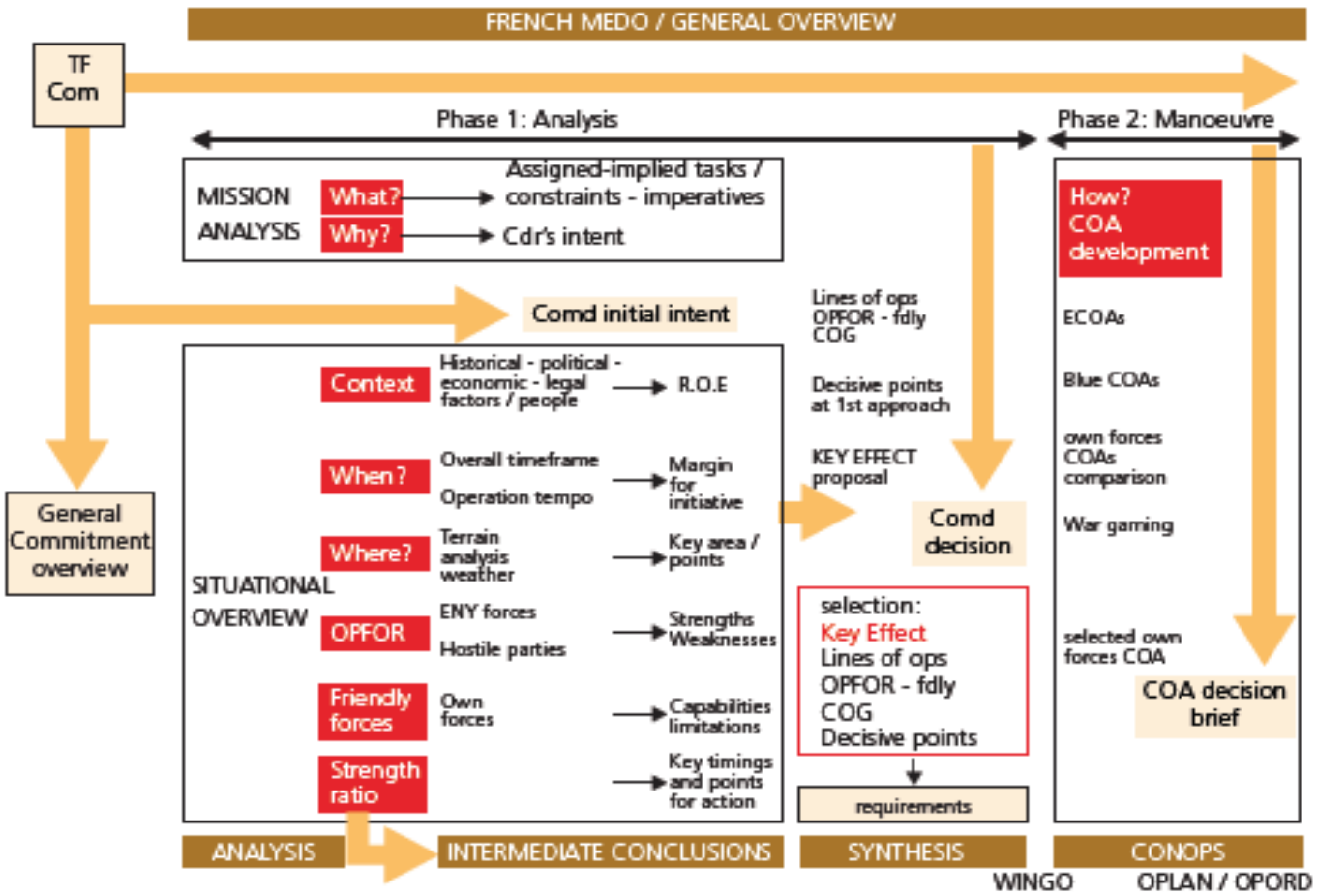

NATO COPD v2.0 and AJP-5.0 (UK)

- **Alliance Command Operations Comprehensive Operational Planning Directive (COPD)**
  - Analogous to a DSEEP for military operations
- **Specifies simulation support should be used in a number of key functional areas**
- **Use of C2SIM permits exchange of digital orders for development, review and testing:**
  - Between planners at different echelons; and
  - Between planners and operations staff.
- **UK adopted NATO Operational Planning Processes**
  - AJP-5.0 subject to national caveats where necessary.

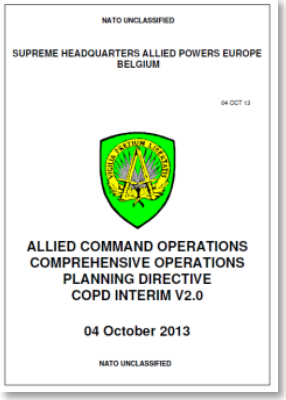
NATO UNCLASSIFIED

SUPREME HEADQUARTERS ALLIED POWERS EUROPE
BELGIUM

04 OCT 13

ALLIED COMMAND OPERATIONS
COMPREHENSIVE OPERATIONS
PLANNING DIRECTIVE
COPD INTERIM V2.0

04 October 2013

NATO UNCLASSIFIED

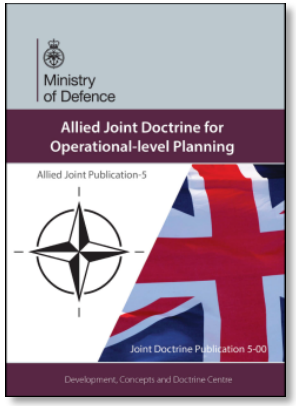

NATO Crisis Response Planning

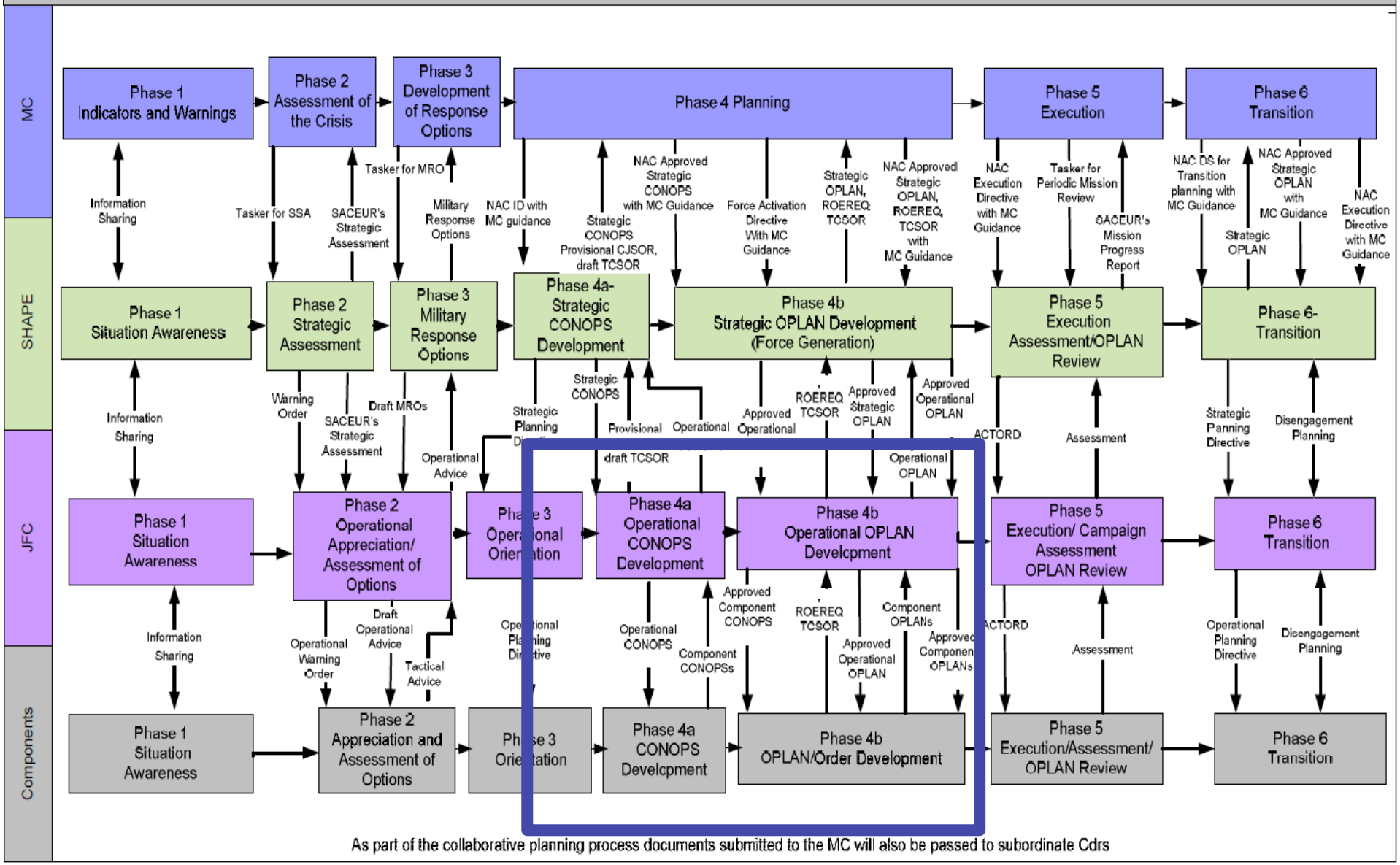

	Functional Area		Functional Area		Functional Area		Functional Area
A	Concept of Operations	L	Psychological Operations	W	Civil-Military Cooperation	HH	Rear Area Operations
B	Task Organisation	M	Arms Control	X	Public Information	II	Joint Fires
C	Forces and Tasks	N	Nuclear Operations	Y	Conflict Termination	JJ	NATO Crisis Response System
D	Intelligence	O	Information Operations	Z	Spare	KK	Operational Analysis Support
E	Rules of Engagement	P	Electronic Warfare	AA	Legal	LL	Lessons Learned
F	Maritime Operations	Q	CIS	BB	Training and Rehearsals	MM	Military Police
G	Land Operations	R	Logistics	CC	Command Information		
H	Air Operations	S	Movements	DD	Space Operations	NN to XX	Spare
I	Amphibious Operations	T	Environmental Support	EE	Engineer Support		
J	Force Protection	U	NBC Defence	FF	Financial Support	YY	Miscellaneous
K	Special Operations	V	Search, Rescue and Recovery	GG	Non-NATO Force Procedures	ZZ	Distribution

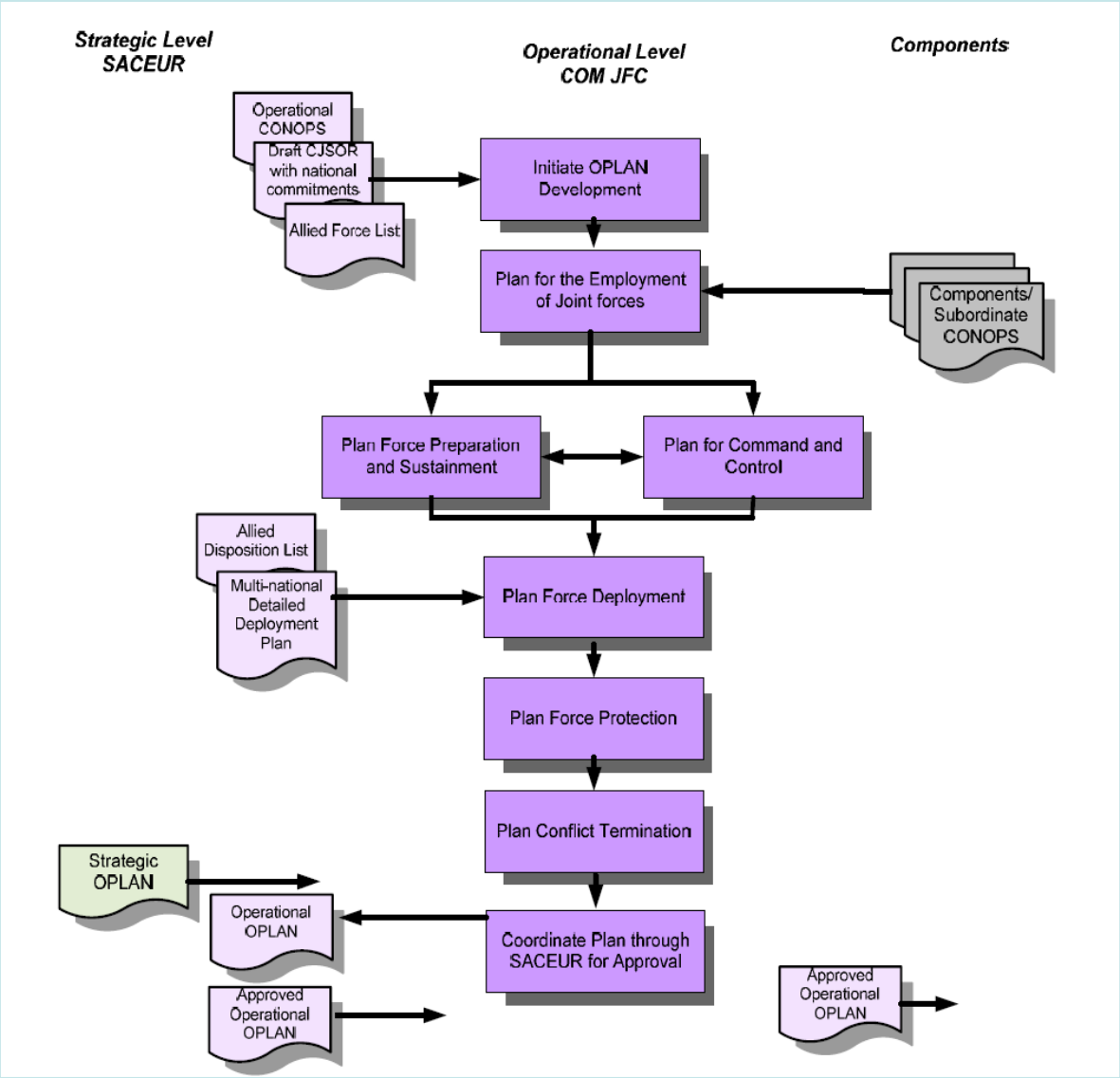

This diagram is from Version 1.0 of the NATO COPD.

This represents the MDMP

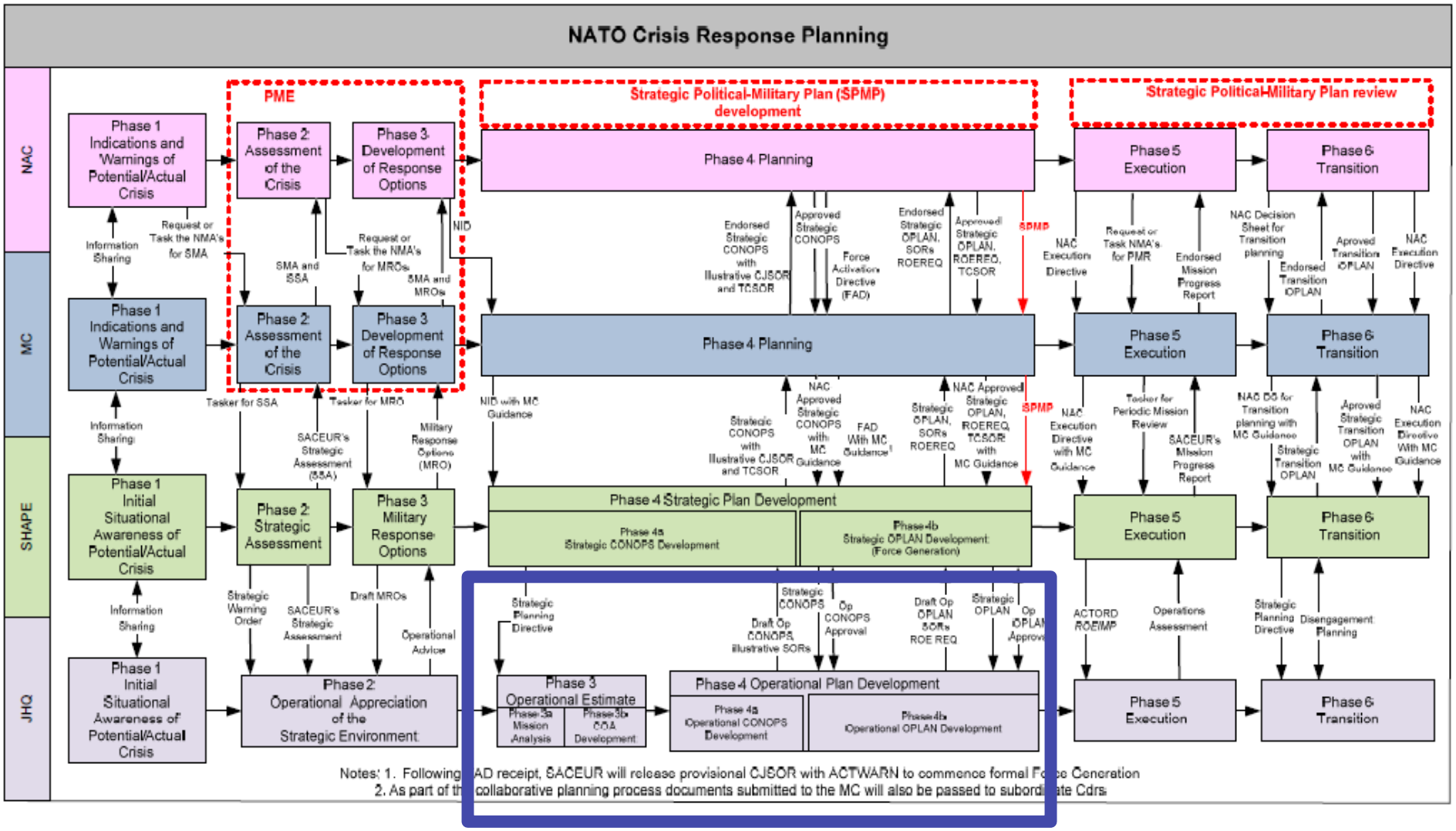
NATO Crisis Response Planning
NAC
MC
SHAPE
JHQ
PME
Strategic Political-Military Plan (SPMP) development
Strategic Political-Military Plan review
Phase 1 Indications and Warnings of Potential/Actual Crisis
Phase 2 Assessment of the Crisis
Phase 3 Development of Response Options
Phase 4 Planning
Phase 5 Execution
Phase 6 Transition
Phase 1 Initial Situational Awareness of Potential/Actual Crisis
Phase 2 Strategic Assessment
Phase 3 Military Response Options
Phase 4 Strategic Plan Development
Phase 4a Strategic CONOPS Development
Phase 4b Strategic OPLAN Development (Force Generation)
Phase 2 Operational Appreciation of the Strategic Environment
Phase 3 Operational Estimate
Phase 3a Mission Analysis
Phase 3b COA Development
Phase 4 Operational Plan Development
Phase 4a Operational CONOPS Development
Phase 4b Operational OPLAN Development
SPMP
Notes: 1. Following AD receipt, SACEUR will release provisional CJSOR with ACTWARN to commence formal Force Generation
2. As part of the collaborative planning process documents submitted to the MC will also be passed to subordinate Cdrs

Joint Mission Planning CIG

- MSG-085 also established a number of Common Interest Groups (CIG) to examine a number of functional areas, one of which was Joint Mission Planning (JMP).
- The JMP CIG investigated how C-BML plans and orders can be used in support of military mission planning, how planning tools can be used to evolve orders (COAA) which can be evaluated quickly using fast-running simulations.
- Chosen plans would then be implemented in a training environment using real-time simulations.
- Although the output of this CIG was only a paper study a number of simulations that could run FTRT were examined and a number of planning tools identified.
- TOPFAS was one of the planning tools and IGS.

TOPFAS

Tools for Operations Planning Functional Area Service

- One of several NATO Functional Area Service (FAS) tools …

AIMS	JEMM	NAMIS
AOSS	JOCWATCH	NIRIS
DHS	JOIIS	NITB
EVE_WEB	JPECT	OANT
ICC	JPECT_Flames	SE JCHAT_CLIENT
iGeoSIT	JTS/FAST	SEW
JCHAT Client	LOGFAS	TOPFAS
JCOP	MCMExpert	TTE

- Potential to extract scenario information from TOPFAS database
- Development of a TOPFAS C2SIM capability is quite feasible

IGS Overview

- There are two editions of IGS:
  - IGS Desktop – a Windows desktop suite of executables which enables full-spectrum order of battle (OOB) modeling, Course of Action (COA) development, geographic visualization, irregular warfare simulation, and quantitative adjudication using the EBW model;
  - IGS Web – a web-based initial operating capability which provides COA development, analysis and modeling and simulation capabilities to enable better analysis and increased planning fidelity.
- Focus for JMP CIG is IGS Desktop as it enables analysis beyond simple force-on-force attrition, incorporating tools which allow users to model and assess Irregular Warfare scenarios involving the political, cultural, economic, infrastructural, and non-state aspects of conflict.

The Desktop Edition of IGS an integrated suite of applications that supports Adaptive Planning, Wargaming, and Warfighting Analyses

Scenario Tool

Rapidly create Order of Battle (OOB) files, including units, weapons, systems, sensor information, logistics, and communications networks

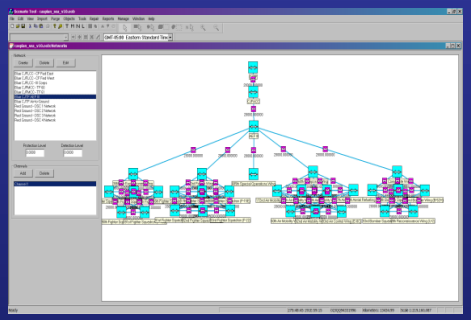

Campaign Planning & Rehearsal System (CPRS)

Enables collaborative COA/plan development, map display, and a preview of operations, including rapid adjudication of COAs

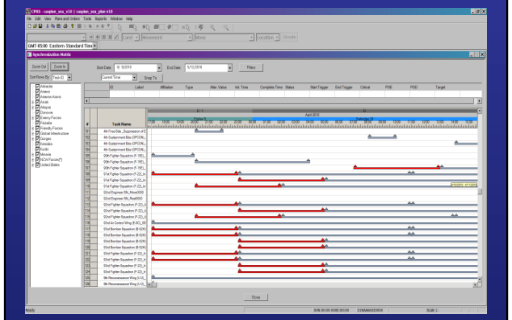

Entropy-Based Warfare™ Model (EBW)

Detailed, campaign level analysis of the attritional and non-attritional effects of kinetic and non-kinetic Courses of Action (MOE/MOP)

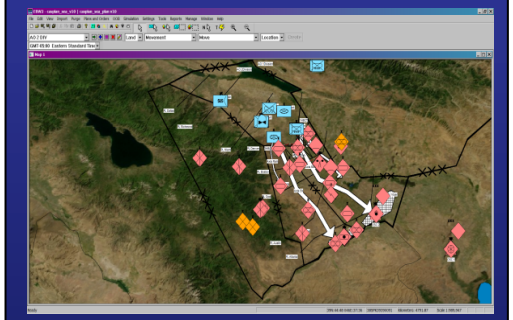

NMSG 85 Approach to Mission Planning Final Demonstration

MSG-085 2013 Mission Planning Demonstration

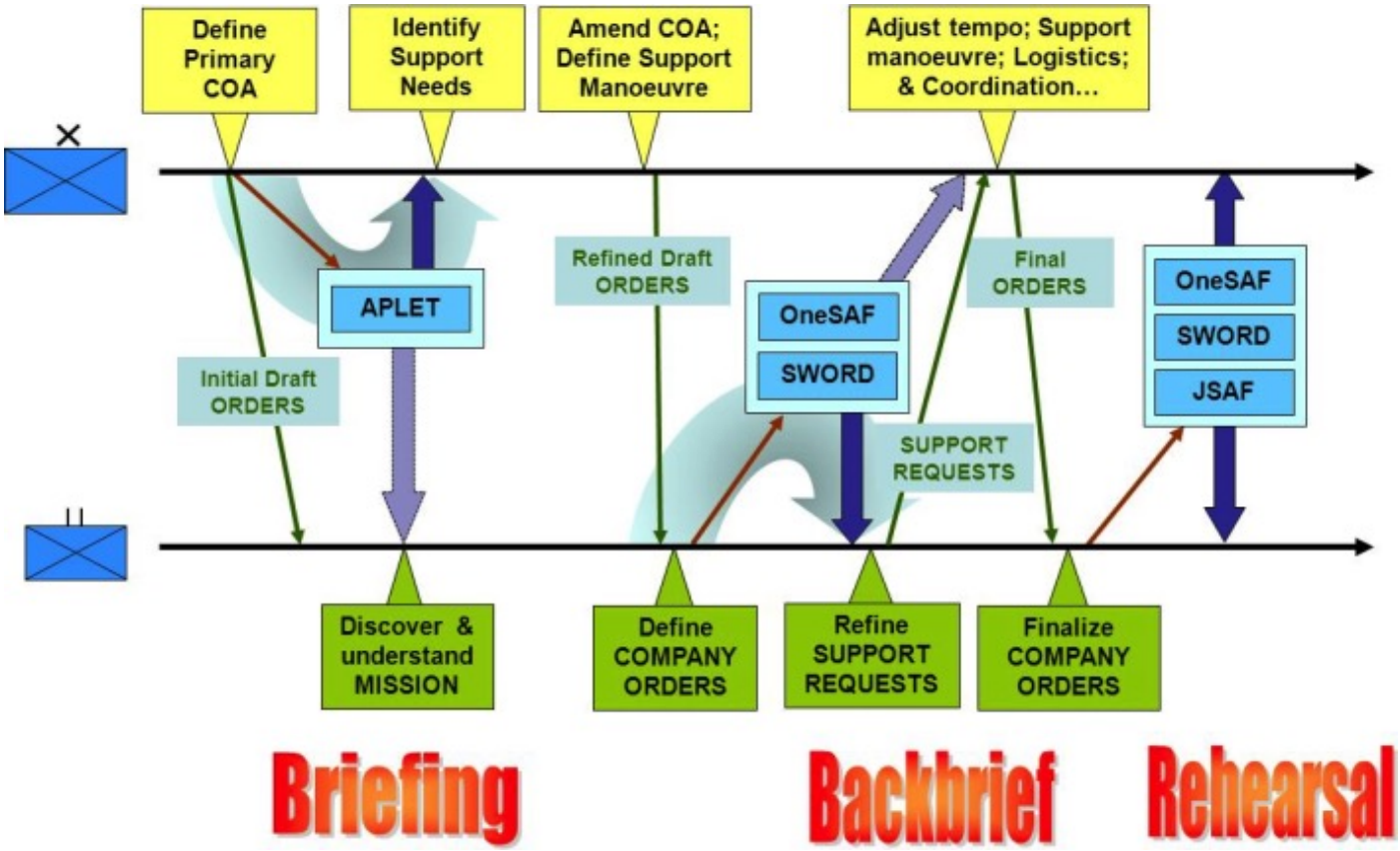

Wargaming

"In conjunction with OA, wargaming can be employed to determine enemy courses of action and to identify, and quantify objectively, possible responses. Given friendly force strengths and dispositions, enemy capabilities and deduced possible courses of action in a set area of operations, proposed own courses of action can be tested. In this way, wargaming can assist in the commander's decision-making and in the development of subsequent plans."

British Army Doctrine Publication Volume 2 Command - April 1995

Genesis of Wargaming

- China - 3000 BC believed to have developed *'Wei-Hai'* (Encirclement).
- India - a game called *'Chaturanga'* was developed from which chess in its various forms came about.
- Europe - 'The King's Game' was created by Christopher Weikmann in 1644.
- Prussia - Introduction of a game developed by Lieutenant von Reisswitz called *'Anleitung zur Darstelling militarische manuver mit dem apparat des Kriegsspiels'* (Instructions for the Representation of Tactical Manoeuvres under the Guise of a Wargame).
  - This game had a number of innovations that included the use of actual topographical maps to enable the visualisation of the battlefield and a set of rules that quantified the effects of combat.

Traditional Approach to COA Wargaming

Purpose of COA Wargaming

- The purpose of a COA Wargame is: to identify risks (opportunities and threats) and areas of weakness in a forming plan;
- Provide a thorough understanding of the interactions of various actors to the plan;
- Highlight additional tasks which may have been overlooked in planning and;
- Refine the synchronisation, resourcing, activity, prioritisation and coordination of a COA(s).
- COA Wargaming can apply to multiple COAs for comparative reasons or in a single selected COA to refine it and add robustness; to ‘bullet proof’ it. Hence a COA Wargame must rigorously test the plan.

COA Wargaming Opportunties

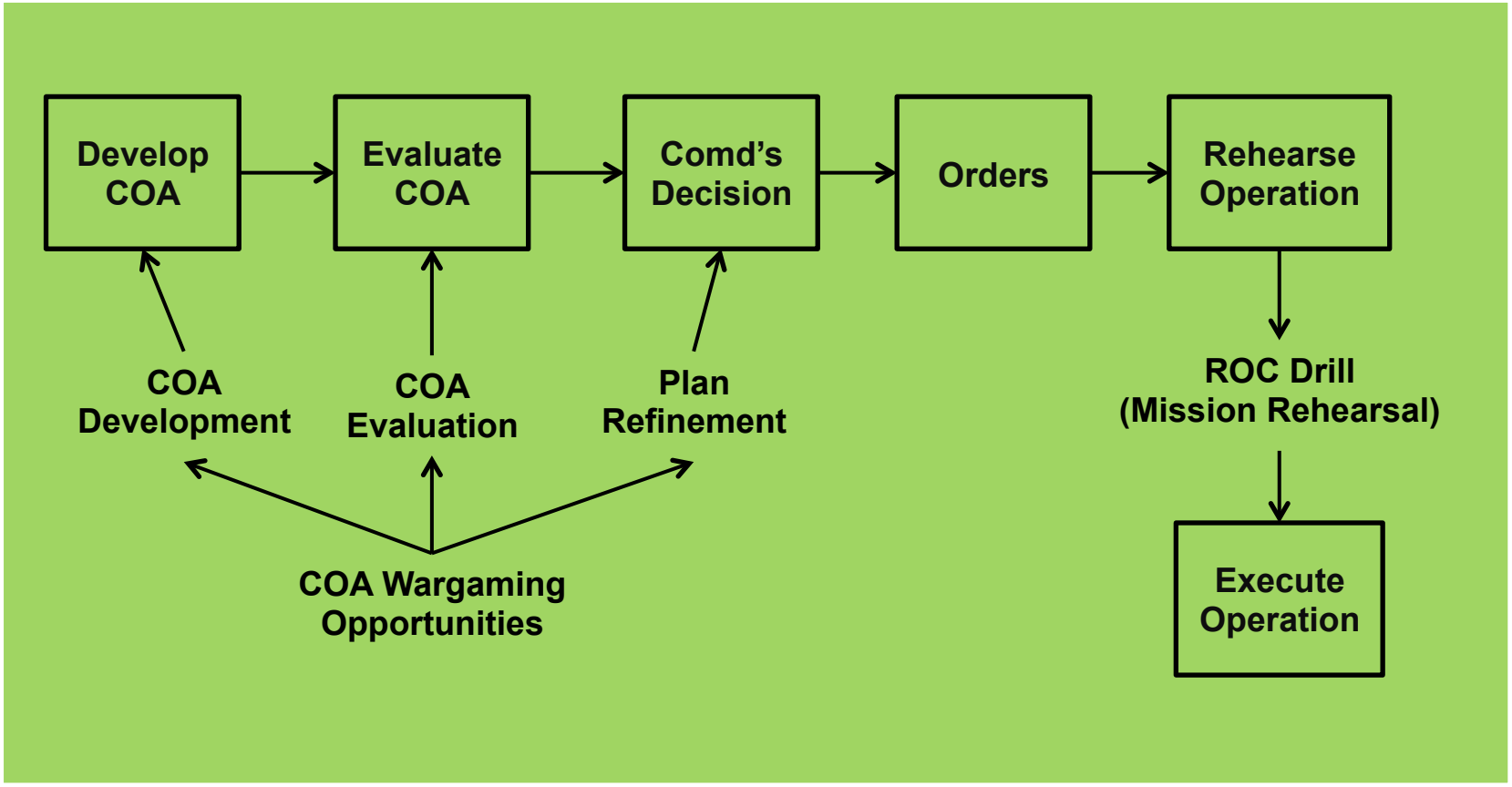

Three Occasions for COA Wargaming

- **COA Development and Validation.** To help to visualise an embryonic COA, indicating the art of the possible and enabling impractical COAs to be discarded at an early stage.
- **COA Evaluation and Comparison.** Can be used to compare each friendly COA with appropriate opponent COAs and other relevant factors to determine the likelihood of success.
- **COA Refinement.** Once the commander has selected his COA, wargaming can contribute significantly to its refinement, including identifying risks, areas of weakness and further CCIRs.

Conducting Mission Rehearsal

Conducting Mission Rehearsal

- C2SIM interoperability requirements for MR are similar to those associated with training events,, and often involves the same systems.
- However, the following distinction could be made: training generally focuses on acquiring skills and achieving operator proficiency, whereas MR focuses on achieving a high level of preparedness with respect to a specific mission and context, often, involving forces that will be deployed.
- The same flexibility and advantages discussed with respect to training also could have advantages for MR.
- However the focus of MR is on risk mitigation and team-building rather than on operator proficiency and reducing the required number of interactors.

UK Faster Than Real Time (FTRT) Experiment

UK FTRT Experiment

- **Aim:**
  - To demonstrate to interested parties the capability to conduct campaign planning that conforms to the NATO COPD processes using C2 systems that are interoperable with an appropriate simulation.
- **Objectives**
  - To show the utility of using standards.
  - Ease of use
  - Benefits to the planning & operational cycle in key functional areas.
    - Reducing the time taken to conduct planning
    - The ability to work concurrently with subordinate & superior organisations
    - Compare multiple courses of actions faster.
    - To better visualise the options that you investigate
    - The basis of an audit
    - Distributed campaign planning dissemination of your plan to allow subordinates access/input.
    - Helping choose the best or optimum course of action

UK FTRT Experiment - Scenario

- **Scenario**
  - An internal demo is being developed using a limited number of OneSAF task adaptors, initially for:
    - Advance, Attack and Engage behaviours
  - UK Mech Inf Bde Contingency ops:
    - 1 Bde, 3 Inf Bns plus Arty, RLC, Recce support elements (730 vehs, 953 soldiers)
  - OpFor
    - 3 BMP Coys (48 vehs, 216 soldiers)

UK FTRT Architecture

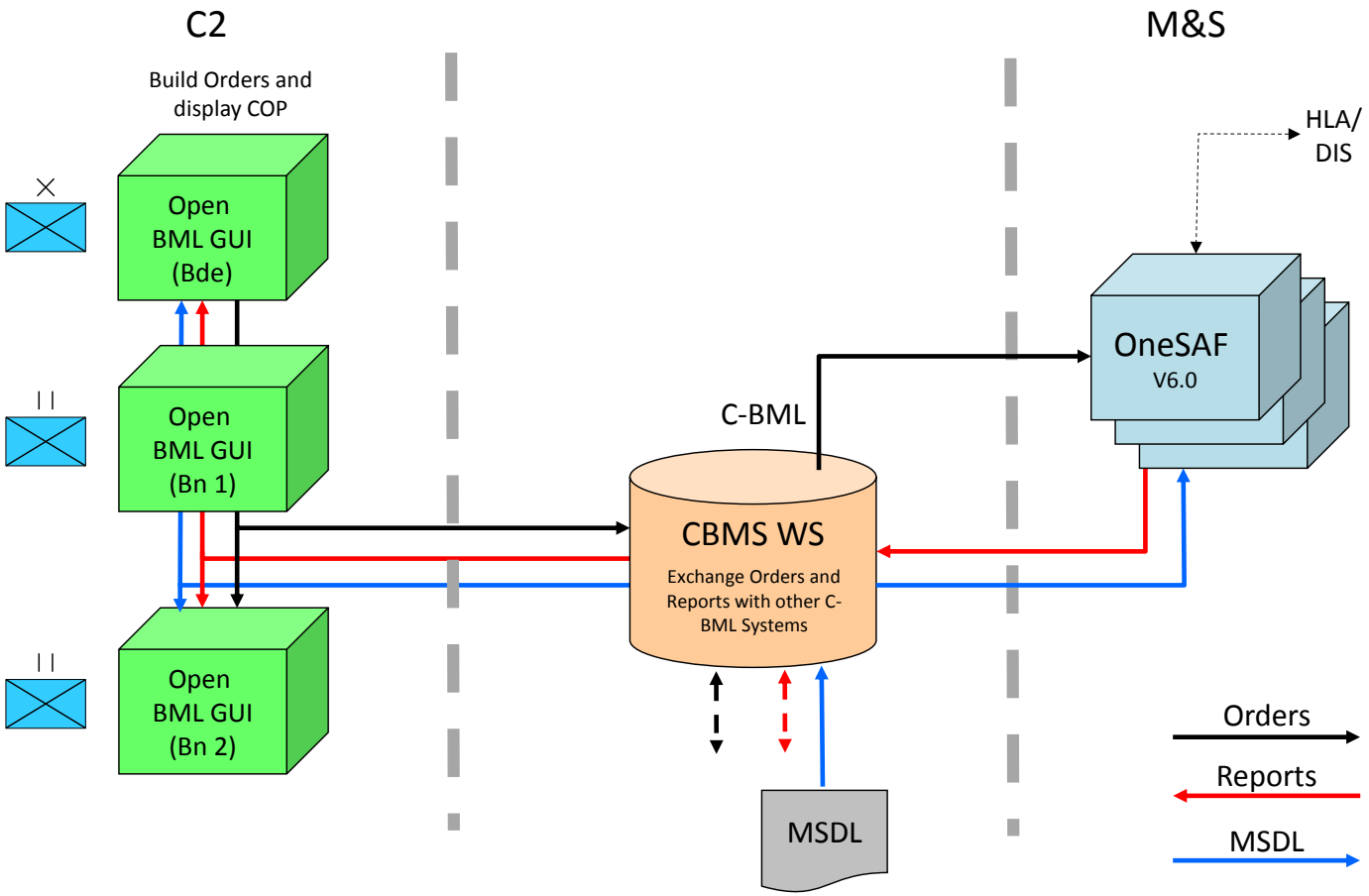

BML GUI Requirements

- Be able to manipulate MSDL Initialisation data:
  - Create, edit, save, load, merge, publish, subscribe
- Be able to manipulate C-BML Orders:
  - Create, edit, save, load, queue, publish, subscribe
- Be able to monitor the simulation through C-BML location and event reports
- Be a component of an integrated military planning tool
- Be easy to use – Map editor, OrBat editor, etc
- Hence, these requirements should apply to a C2 Planning Application/Tool

Thales C2 SIM BML GUI

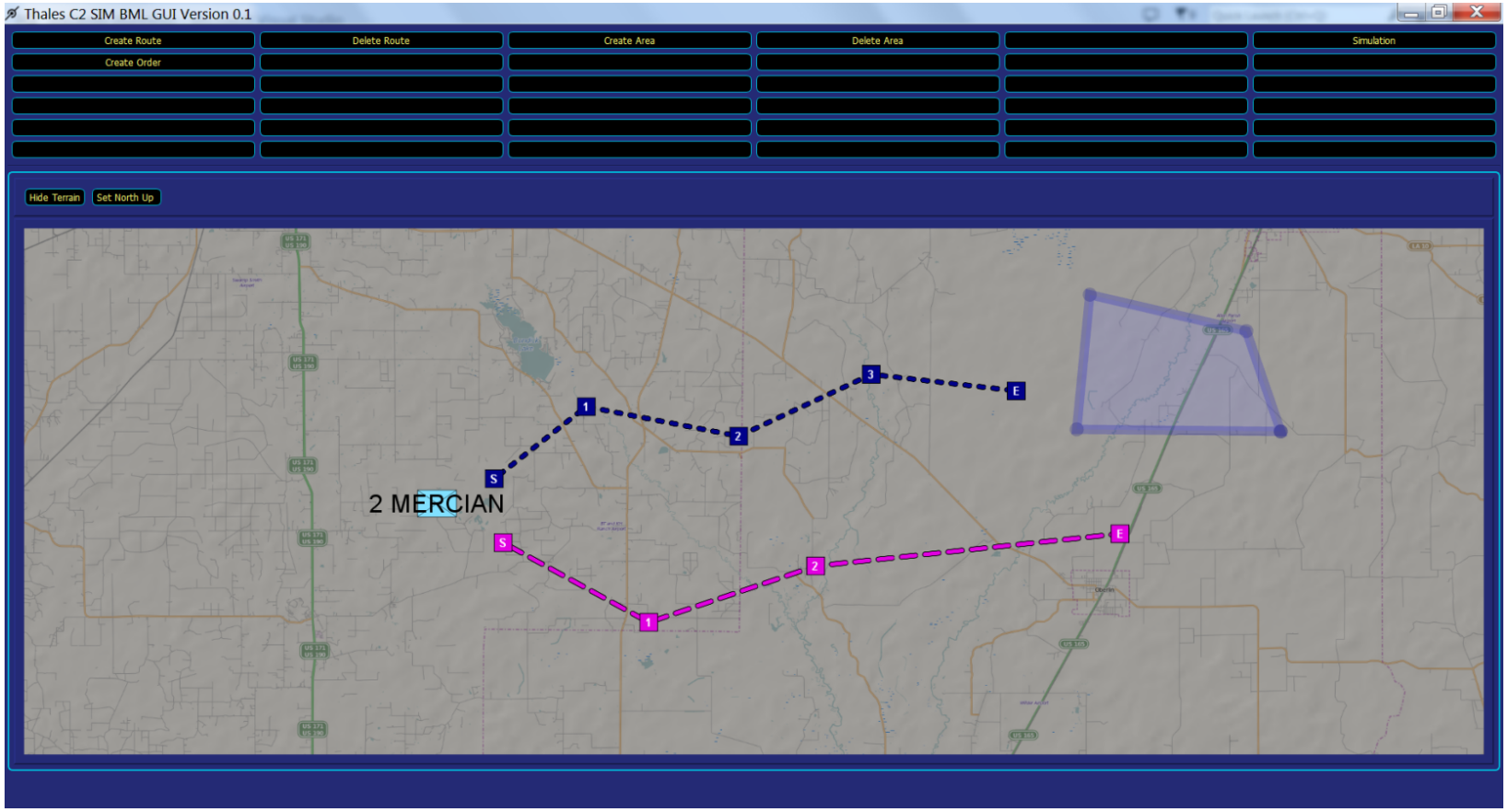

OneSAF

- **BML Plug-in:**
  - Permits C-BML Orders to be loaded through a file dialogue GUI
  - Initially only using ADVANCE, ATTACK, ENGAGE* behaviours
- **OA Mode:**
  - Designed to permit Monte Carlo, FTRT operation without operator intervention
- **Data Collection:**
  - OneSAF Data Collection and Specification Tool used

*** These are the MIP terms used by the C-BML Schema**

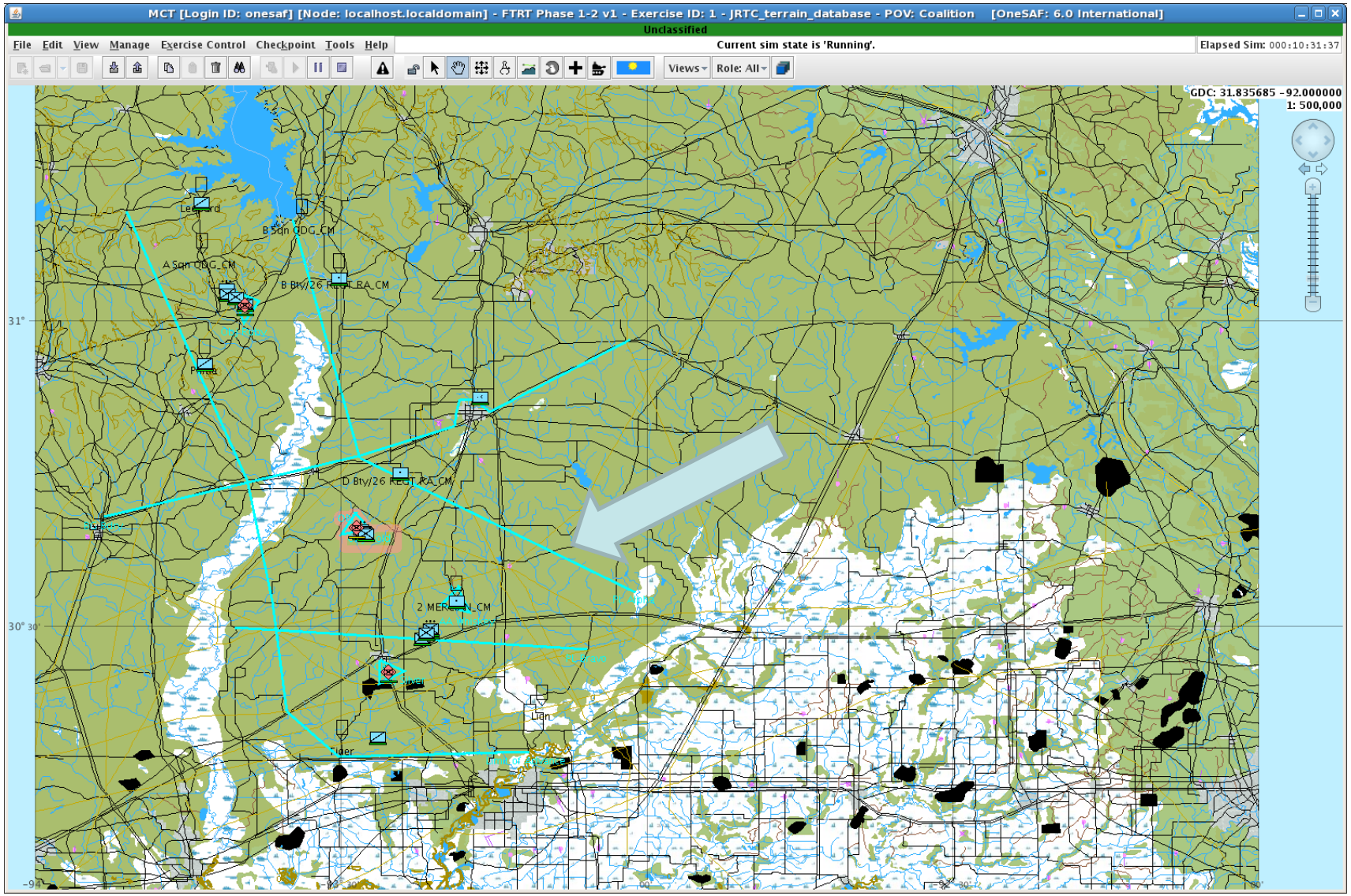
MCT [Login ID: onesaf] [Node: localhost.localdomain] - FTRT Phase 1-2 v1 - Exercise ID: 1 - JRTC_terrain_database - POV: Coalition [OneSAF: 6.0 International]
Unclassified
File Edit View Manage Exercise Control Checkpoint Tools Help
Current sim state is 'Running'.
Elapsed Sim: 000:10:31:37
Views
Role: All
GDC: 31.835685 -92.000000
1: 500,000
Leopard
B Sqn ODG_CM
A Sqn ODG_CM
B Bty/26 REGT RA_CM
D Bty/26 REGT RA_CM
2 MERCIAN_CM
Lion
Tiger
31°
30° 30'

Questions